Grow With Me™ RC Rally

Model Number 77306

Please keep this instruction sheet for future reference, as it contains important information.

Requires four "C" (LR14) **alkaline** batteries for control tower; four "AA" (LR6) **alkaline** batteries for car; and one 9V (6LR61) **alkaline** battery for remote controller (batteries not included).

Adult assembly is required.

Tool required for assembly:
Phillips screwdriver (not included).

Fisher-Price®

Discover what's possible™...www.fisher-price.com

Parts

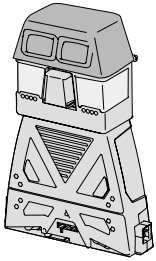
Control Tower

Double Flag

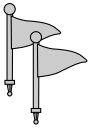
2 Flags

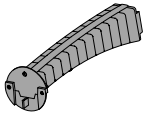
Handle

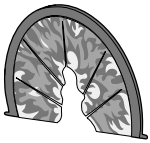
Ring of Fire

Remote Controller Holder

Handle Support

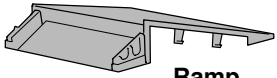
Ramp

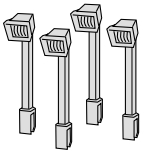
4 Stadium Lights

Car

Remote Controller

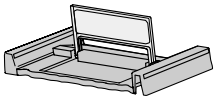
Crash Gate

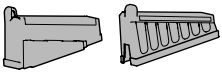
2 Ramp Rails

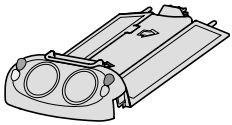
Starting Ramp

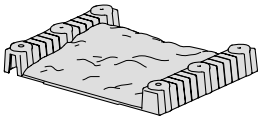
Dirt Track

5 Barrels

3 Cones

3 Hay Bales

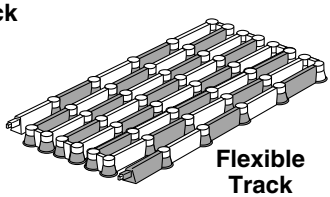
Flexible Track

#6 x ½" Screw - 5
Shown Actual Size

Label sheet not shown.

Battery Installation

Control Tower

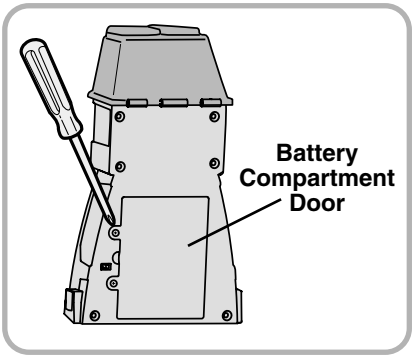

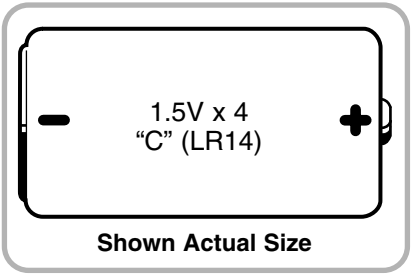

Shown Actual Size

- Locate the battery compartment on the back of the control tower.
- Loosen the screws in the battery compartment door with a Phillips screwdriver. Remove the battery compartment door.
- Insert four "C" (LR14) **alkaline** batteries, as indicated inside the battery compartment.
- Replace the battery compartment door and tighten the screws with a Phillips screwdriver. Do not over-tighten.

Car

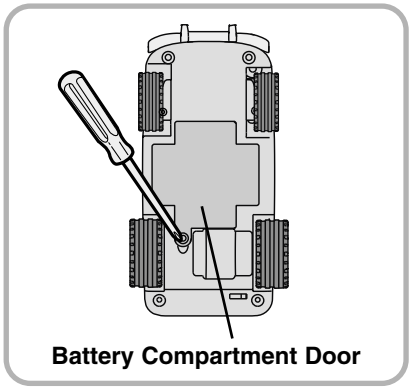

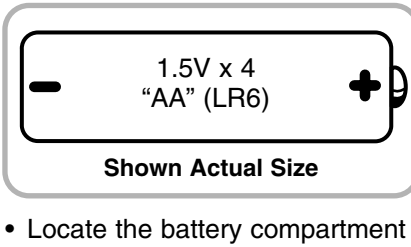

Shown Actual Size

- Locate the battery compartment on the bottom of the car.
- Loosen the screw in the battery compartment door with a Phillips screwdriver. Remove the battery compartment door.
- Insert four "AA" (LR6) **alkaline** batteries, as indicated inside the battery compartment.
- Replace the battery compartment door and tighten the screw with a Phillips screwdriver. Do not over-tighten.

Battery Installation

Remote Controller

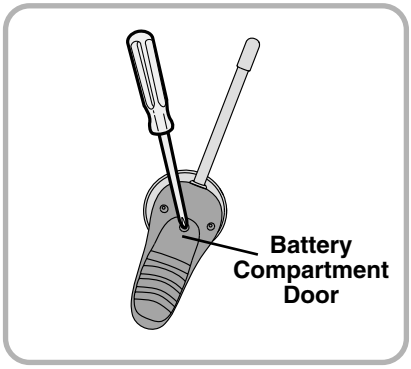

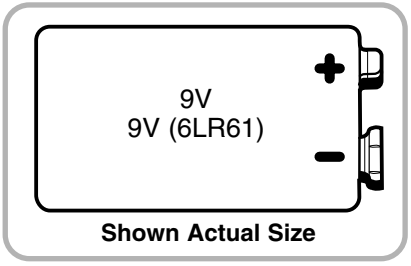

- Locate the battery compartment on the back of the remote controller.
- Loosen the screw in the battery compartment door with a Phillips screwdriver. Remove the battery compartment door.
- Insert one 9V (6LR61) **alkaline** battery, as indicated inside the battery compartment.
- Replace the battery compartment door and tighten the screw with a Phillips screwdriver. Do not over-tighten.

When To Replace Batteries

If this toy is working slowly or erratically, it's likely that batteries need to be replaced. While it is possible that all batteries may need replacement, the batteries that will need replacement most often are the batteries in the car, followed by the remote controller, and then the control tower. For more information, see the troubleshooting guide beginning on page 19.

Battery Tips

- We recommend using **alkaline** batteries for longer battery life.
- Do not mix old and new batteries.
- Do not mix different types of batteries: **alkaline**, standard (carbon-zinc) or rechargeable (nickel-cadmium).
- Remove the batteries during long periods of non-use. Always remove exhausted batteries from the toy. Battery leakage and corrosion can damage this toy. Dispose of batteries safely.
- Do not dispose of batteries in a fire. The batteries may explode or leak.
- Never short circuit the battery terminals.
- Non-rechargeable batteries are not to be recharged.
- Only batteries of the same or equivalent type as recommended in the "Battery Installation" instructions are to be used.
- If removable rechargeable batteries are used, they are only to be charged under adult supervision.
- Rechargeable batteries are to be removed from the toy before they are charged.
- If you use a battery charger, it should be examined regularly for damage to the cord, plug, enclosure and other parts. Do not use a damaged battery charger until it has been properly repaired.

Assembly

⚠ WARNING

This product contains small parts in its unassembled state. Adult assembly is required.

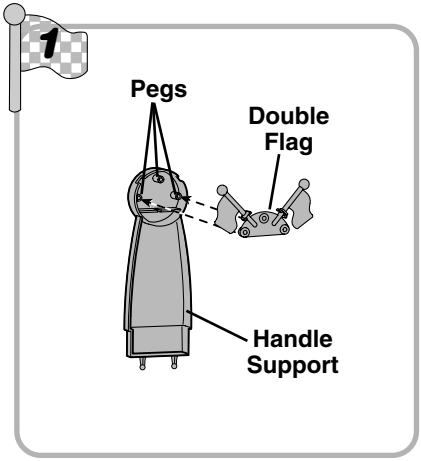

- Position the handle support so the pegs are facing you.
- With the checkered side facing down, fit the double flag on to the pegs on the handle support.

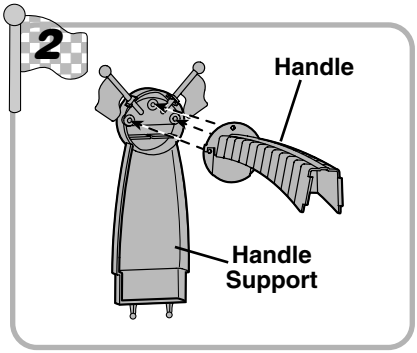

- Fit the handle onto the handle support as shown.

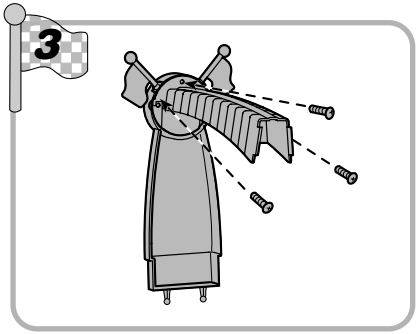

- Insert three screws through the holes in the handle and into the handle support. Tighten the screws with a Phillips screwdriver. Do not over-tighten.

Assembly

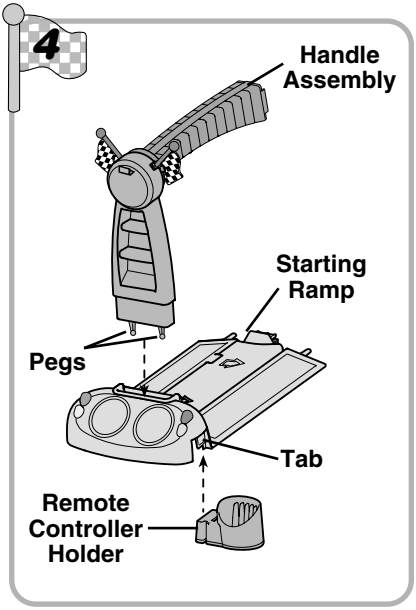

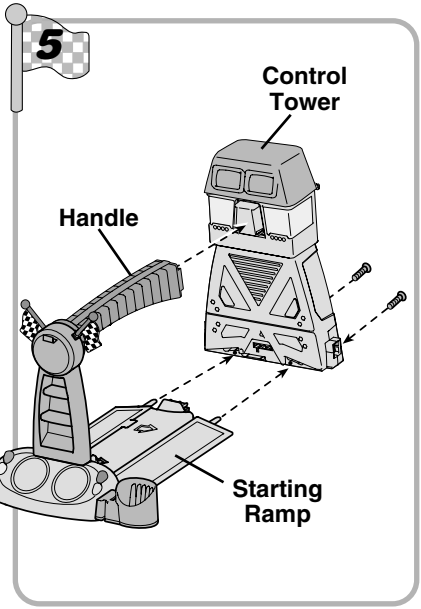

- "**Snap**" the remote controller holder onto the tab on the bottom of the starting ramp, as shown.
- Insert and "**snap**" the pegs on the bottom of the handle assembly into the matching holes in the starting ramp as shown.

- Insert and "snap" the tabs on the handle into the matching holes in the control tower as shown.
- Insert two screws through the holes near the bottom of the control tower and into the pegs in the starting ramp. Tighten the screws with a Phillips screwdriver. Do not over-tighten.

Assembly

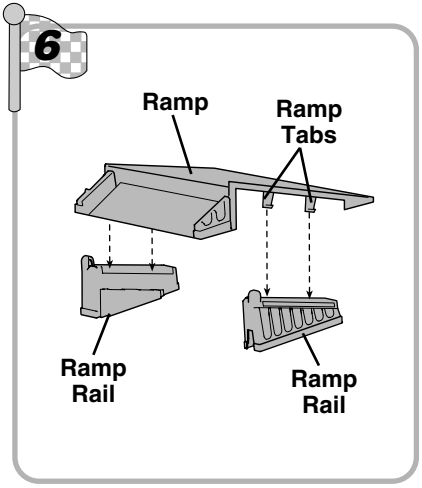

- Insert and **"snap"** the tabs on the ramp into the matching slots in a ramp rail.
- Repeat this procedure to attach the other ramp rail.

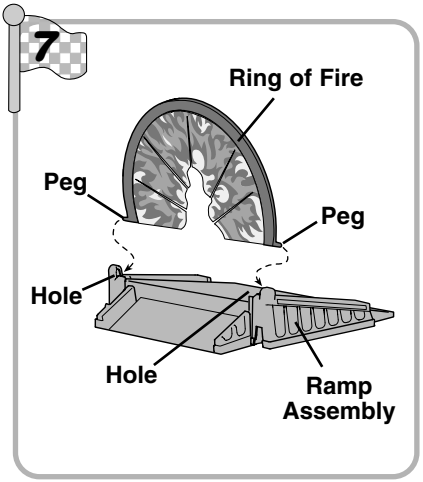

- Gently squeeze the ring of fire to insert the pegs on either end into the matching holes at the top of the ramp assembly, as shown.

Label Decoration

Proper label application will help keep labels looking their best! When applying labels, keep the following guidelines in mind:

- Wash hands before applying labels.
- Before applying labels, wipe the surface of the toy with a clean, dry cloth to remove dust or oils.
- For best results, avoid repositioning a label once it has been applied.
- Apply labels as shown in the illustration.

One-time assembly is now complete.

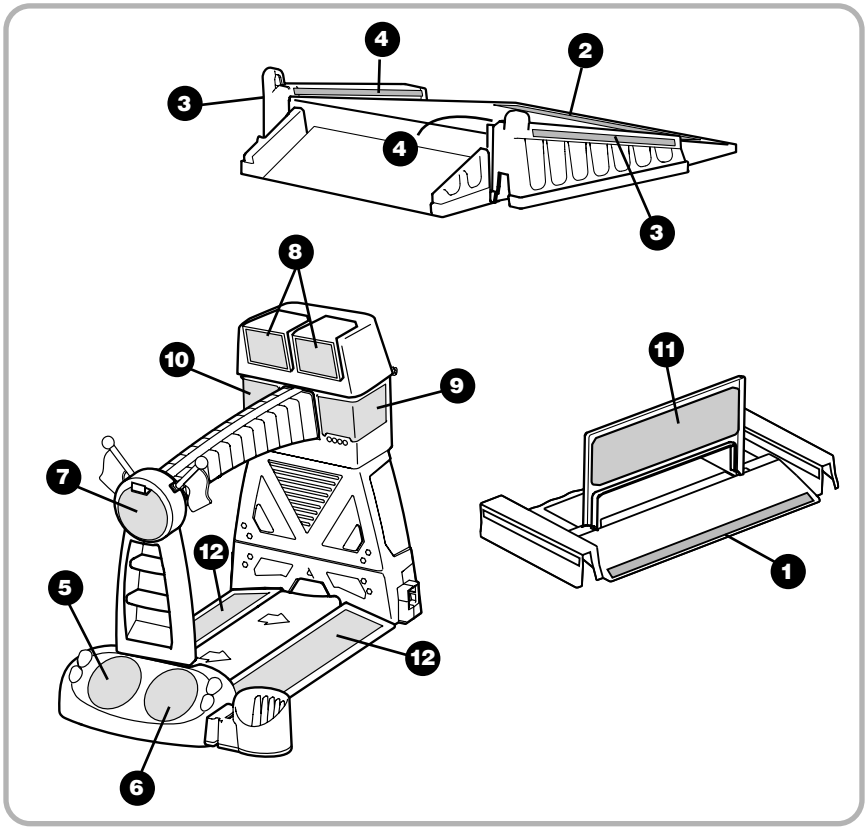

Mode I - Beginner Driver

Mode I is for a beginner or younger driver. Automatic Course Control always keeps the car hugging the track, even over obstacles. Just press the remote controller button to go and release to stop.

Setting Up The Track

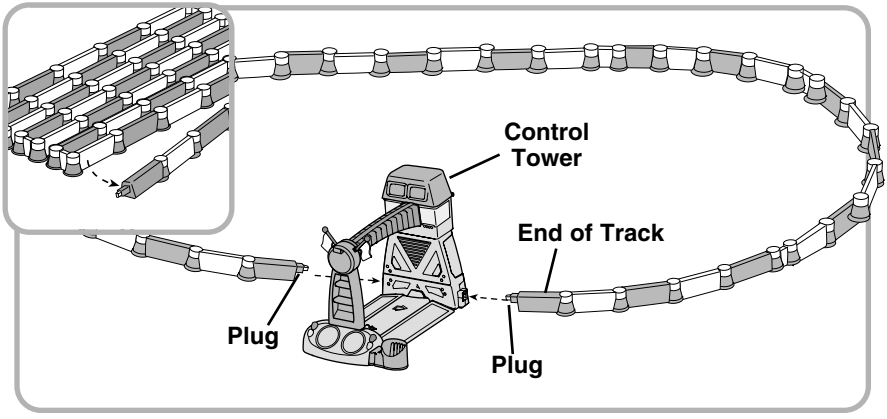

Hint: *For best performance, use this toy on a smooth, flat surface. We do not recommend use on a deep, pile carpet. This toy is designed for indoor use only.*

- Unfold the flexible track into an oval shape and place it **behind** the control tower.
- Insert the plugs on each end of the flexible track into the matching slots on either side of the control tower.

IMPORTANT! For proper function, the track must be installed behind the control tower.

- Push or pull the flexible track into any curved shape you like.

Notes:

– *The track creates a magnetic field. Do not use this toy around items that are sensitive to or affected by magnetic fields.*

– *Do not connect two Grow With Me™ RC Rally sets together.*

Mode I - Beginner Driver

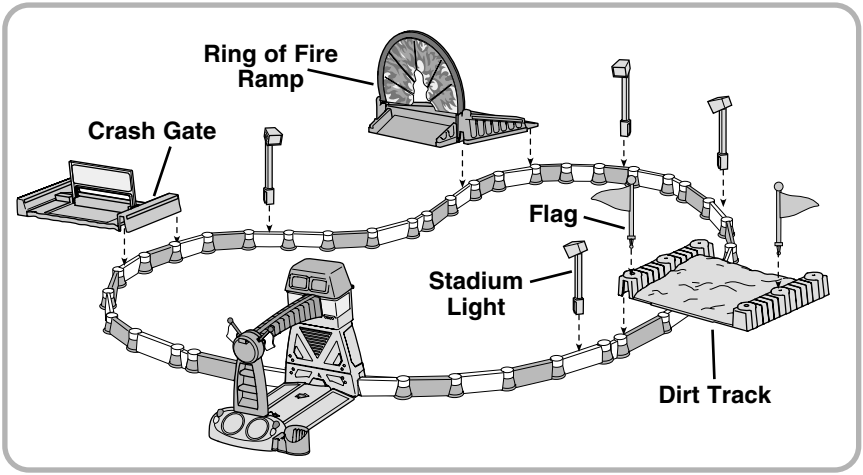

- Note the grooves on the edges of the crash gate, the ring of fire ramp and the dirt track.
- Fit the grooves on these three obstacles onto the flexible track. Place the obstacles anywhere you like, but be sure to keep them on the **outside of the track**, as shown.

Hint: *For best performance, space the obstacles equally around the course.*

- Fit the four stadium lights anywhere onto the track.
- Fit the two flags into any of the holes on the dirt track.

Mode I - Beginner Driver

Let's Go

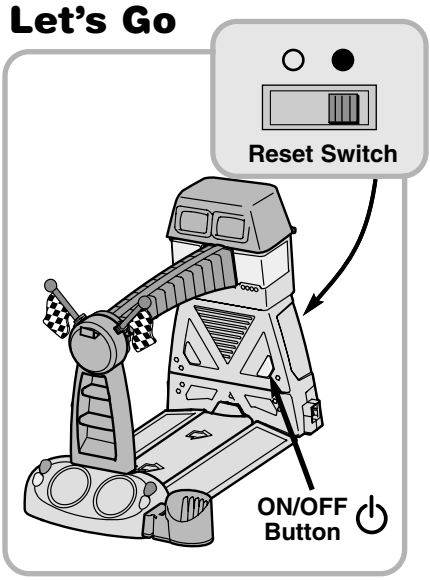

- Locate the reset switch on the back of the control tower.
- Slide the reset switch ON ●.
- Locate the ON/OFF button on the front of the control tower.
- Press the ON/OFF button to turn the track and the control tower on. The button lights up if the track is properly connected!

Hint: *If the car has not driven past the control tower in a few minutes, the control tower turns off automatically and the control tower button light goes out. Press the ON/OFF button again for power in the control tower and track.*

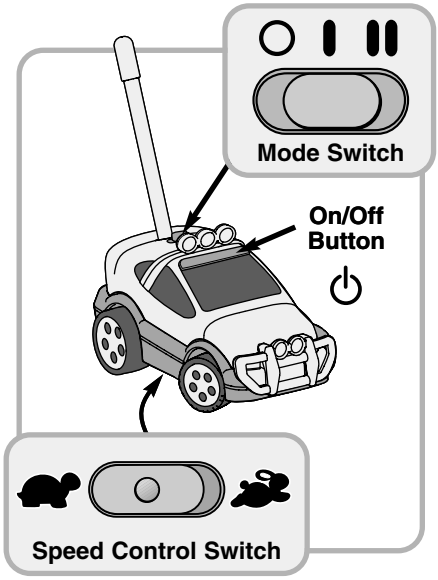

- Slide the mode switch on top of the car to I for beginner driver mode.
- Locate the speed control switch on the bottom of the car.
- Slide the switch to either slow speed or fast speed .

Hint: *We recommend slow speed for first time drivers.*

- Press the ON/OFF button on top of the car to turn the car on. The car button lights up. The car is now ready to receive a signal from the remote controller.

Hint: *If the car has not been driven for a few minutes, it turns off automatically. Press the ON/OFF button again for power in the car.*

Mode I - Beginner Driver

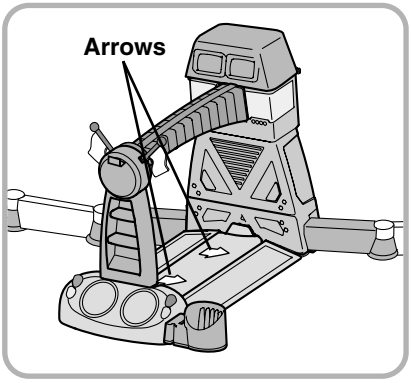

- Note the arrows on the starting ramp.

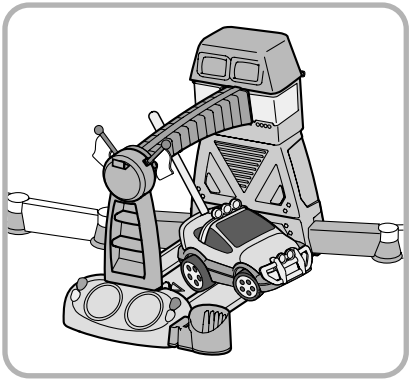

- Place rear wheels of the car on the starting ramp, **making sure the car is pointing in the same direction as the arrows**. The car should move around the track counter-clockwise. Listen to the engine revving.

⚠ WARNING

To prevent entanglement, keep hair away from wheels.

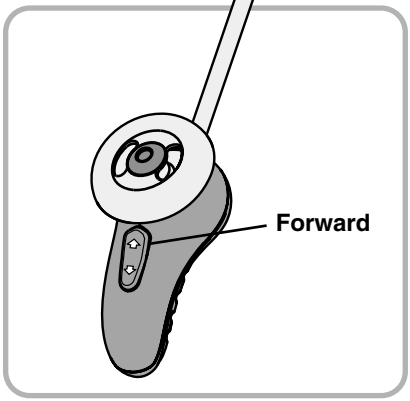

- Press the forward button ⌂ on the remote controller. The car moves around the track, hugging all the way without steering!

Hint: *The car only travels forward in Mode I - Beginner Driver. The reverse button and the steering wheel also do not work on the remote controller.*

- You will hear racing sound effects from the control tower each time the car crosses the starting ramp.

Mode II - Pro Driver

Mode II is for a more experienced driver who has acquired better manual skills. In this mode, your child can take full control of steering and direction. For some challenging fun, your child can set up an off road course and use the remote controller wheel to steer around obstacles.

Setting Up The Track

- For off-road fun, place the starting ramp, dirt track, ring of fire or crash gate in any layout you like.
- Place additional obstacles around your layout like the cones or hay bales or barrels to test driving skills.
- You can still use the flexible track as an obstacle or part of your layout, but note that the “Automatic Course Control” feature does not work in Mode II - Pro Driver.

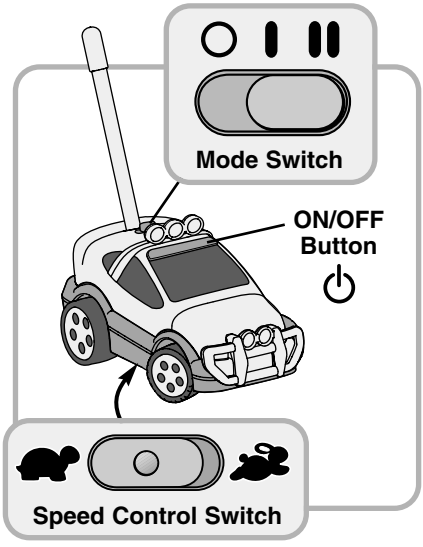

- Slide the switch on the top of the car to II for pro driver mode.
- Locate the speed control switch on the bottom of the car.
- Slide the switch to either slow speed or fast speed .
- Press the ON/OFF button on top of the car to turn the car on. The car button lights up. The car is now ready to receive a signal from the remote controller.

Hint: *If the car has not been driven for a few minutes, it turns off automatically. Press the ON/OFF button again for power in the car.*

Mode II - Pro Driver

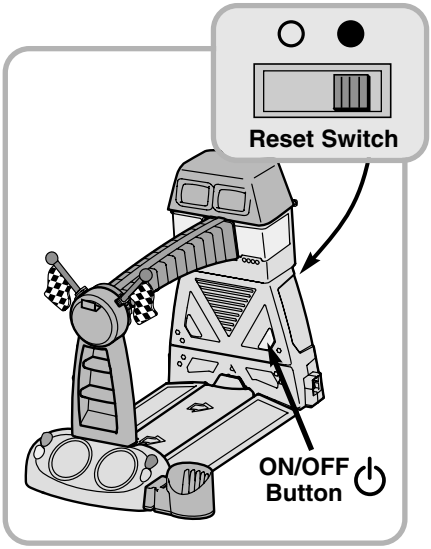

- Turn the control tower power on to hear sound effects each time the car drives over the starting ramp.
- Be sure the reset switch on the control tower is set to the on position ●.
- Press the ON/OFF button on the front of the control tower to turn power on. While power is on, the button will not light because the track is not connected to the control tower in this mode.

Hint: *If the car hasn't driven past the control tower for a few minutes, the tower turns off automatically. Press the ON/OFF button again for power.*

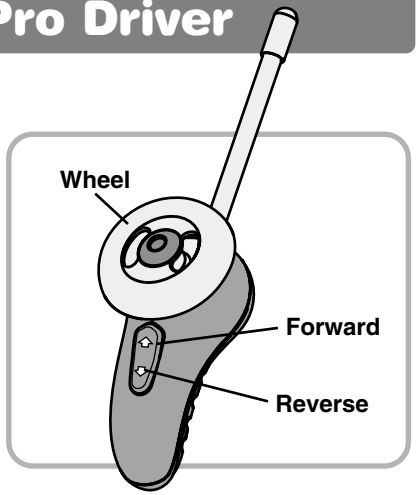

- Press the forward button ⇧ on the remote controller.The car moves forward.
- Press the reverse button ⇩ on the remote controller. The car moves backward.
- Use the wheel on the remote controller to maneuver around the track or past obstacles.

Note: *The range of the remote controller to the car is 15 feet (with no obstructions).*

Storage

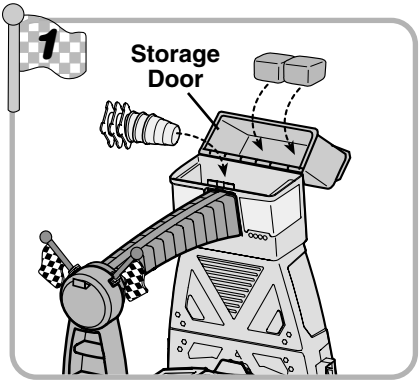

- Lift the control tower storage compartment door.
- Place the barrels, cones, hay bales and road flags into the control tower storage compartment and door. Close the door.

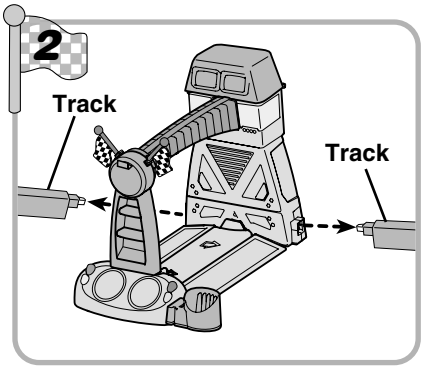

- Remove the flexible track from both sides of the control tower.

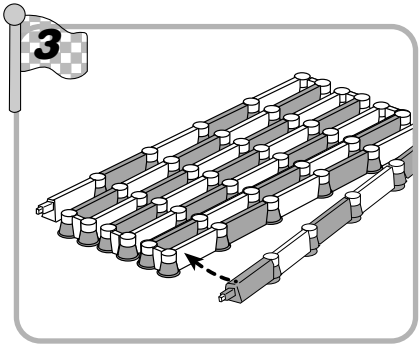

- Fold up the track, as shown.

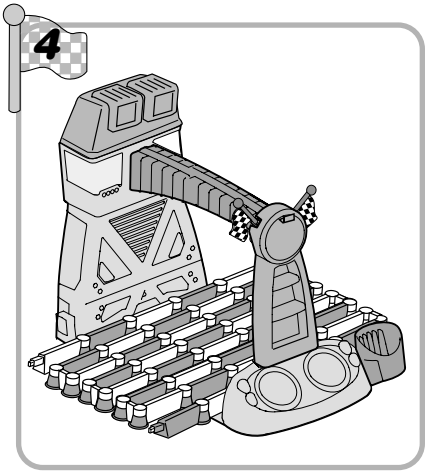

- Slide the track over the starting ramp.

Storage

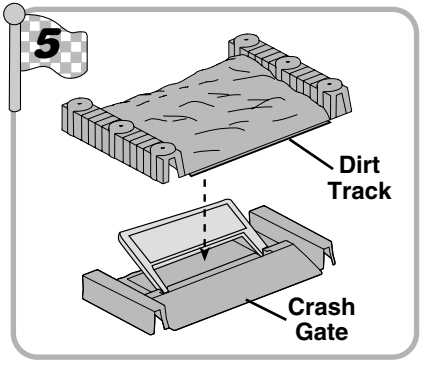

- Fit the dirt track to the crash gate as shown.

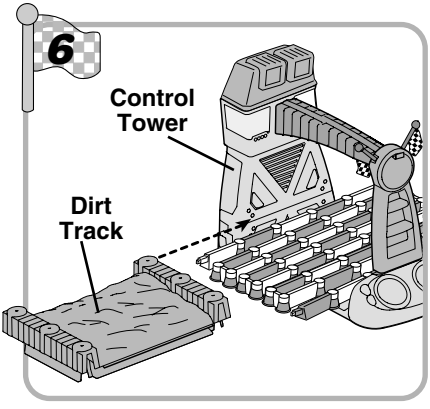

- Slide the edges of the dirt track into the grooves in the handle support and control tower.

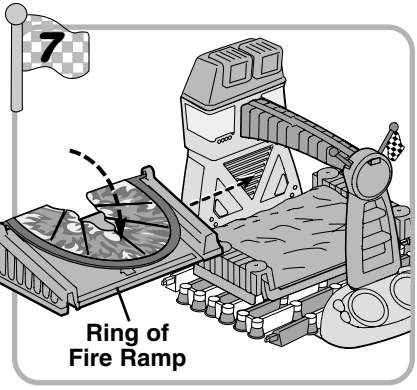

- Fold the ring of fire down onto the ramp.
- Fit the ring of fire ramp onto the dirt track as shown.

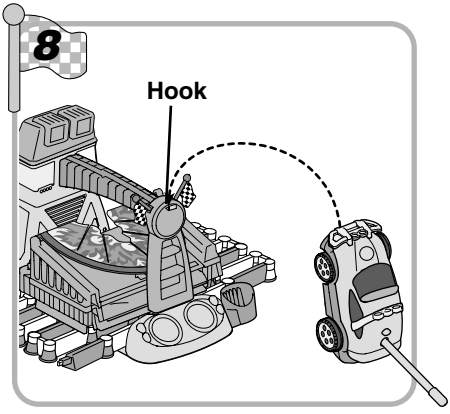

- Attach the car to the hook on the handle support as shown.

Storage

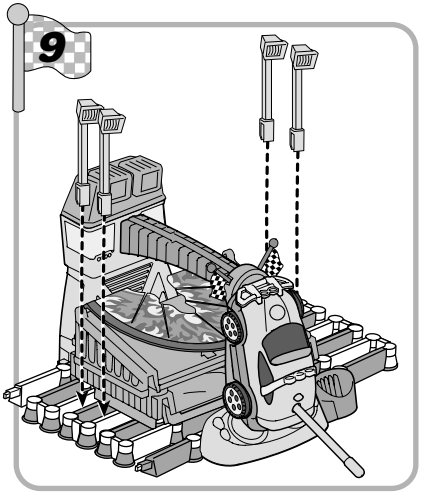

- Fit the stadium lights onto the track as shown.

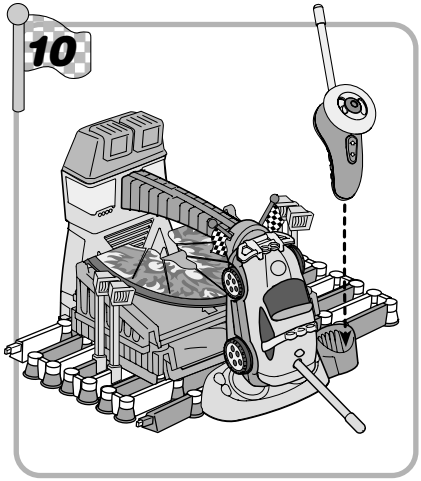

- Place the remote controller in the holder as shown.

Care

- Keep the car tires clean for best performance.
- Wipe this toy with a clean cloth dampened with a mild soap and water solution. Do not immerse this toy.
- This toy has no consumer serviceable parts. Do not take this toy apart.
- Do not drop this toy on a hard surface.

Troubleshooting Guide

Symptom	Solution
Car moves very slowly	• Battery power in the car may be weak. Replace all four batteries with fresh, **alkaline** batteries. • The wheels may be dirty. Wipe them with a clean cloth dampened with a mild soap and water solution.
In Mode I, the car runs closer and closer to the track; or car keeps hitting track	• Battery power in the control tower may be weak. Replace all four batteries in the control tower with fresh, **alkaline** batteries. • The car may be going around the track in the wrong direction. Be sure the car is pointing in the same direction as the arrows on the starting ramp. The car should go around the track counter-clockwise. • The track may be set up on the wrong side of the control tower. Be sure the track is set up **behind** the control tower. • The car may be running inside the track layout. Be sure the car is running outside the track layout so the car it crosses the starting ramp.
Car responds intermittently to the remote controller	• Battery power in the remote controller or the car may be weak. First, replace the battery in the remote controller with a fresh, **alkaline** battery. If the problem persists, replace all four batteries in the car with fresh, **alkaline** batteries. • You may be beyond the range of the remote controller, which is about 15 feet (with no obstructions).

Troubleshooting Guide

Symptom	Solution
Car does not respond to the remote controller	• The car mode switch may be set to off **O**. Be sure the mode switch on the car is set to **I** or **II** . • The power indicator on the car is off, and the car may have turned off automatically. Press the ON/OFF button on the car to turn it on again. The button should light up. • If the ON/OFF button on the car is lit, battery power in the remote controller may be weak. Replace the battery in the remote controller with a fresh, **alkaline** battery. • You may be beyond the range of the remote controller which is about 15 feet (with no obstructions).
There are no sound effects when the car crosses the starting ramp	• The control tower power may be turned off. Make sure the reset button is in the on ● position. Press the ON/OFF button again. • The control tower may have turned off automatically and the ON/OFF button will no longer be lit. Press ON/OFF button on the control tower to turn it on again. The button should light up. • Battery power in the control tower may be weak. Replace all four batteries in the control tower with fresh, **alkaline** batteries.
Automatic Course Control feature is not working	• Make sure the mode switch on the car is set to the **I** position and turned on. The ON/OFF button should be lit. • Make sure the control tower reset button is turned on ●. • Make sure the flexible track is completely connected to the control tower on both sides. The ON/OFF button should be lit up. • The control tower may have turned off automatically and the ON/OFF button is not lit. Press ON/OFF button on the control tower to turn power back on. The button should light. • The car may be going around the track in the wrong direction. Be sure the car is pointing in the same direction as the arrows on the starting ramp. The car should move around the track counter-clockwise. • The car is too far from the flexible track. Make sure the car is within four inches of the track for best performance.

Troubleshooting Guide

Symptom	Solution
Car keeps sliding in the turns	• Try reducing speed in the turns by releasing the remote controller button. • Set the car to the slow speed setting . • Be sure the flexible track layout does not have sharp bends. Try an oval, kidney or other curved shape. • The wheels may be dirty. Wipe them with a clean cloth dampened with a mild soap and water solution. Do not immerse the car.
Car keeps turning in circles (Mode I)	• The car may be going around the track in the wrong direction. Be sure the car is pointing in the same direction as the arrows on the starting ramp. The car should move around the track counter-clockwise. • The car is too far from the flexible track. Make sure the car is within four inches of the track for best performance.

One (1) Year Limited Warranty

Fisher-Price, Inc., 636 Girard Avenue, East Aurora, New York 14052, warrants that “Grow with Me™ RC Rally” is free from all defects in material and workmanship when used under normal conditions for a period of one (1) year from the date or purchase.

Should the product fail to perform properly, we will repair or replace it at our option, free of charge. Purchaser is responsible for shipping the product to Fisher-Price Consumer Relations at the address indicated below and for all associated freight and insurance cost. Fisher-Price, Inc. will bear the cost of shipping the repaired or replaced item to you. This warranty is void if the owner repairs or modifies the product. This warranty excludes any other liability other than that expressly stated above including but not limited to any incidental or consequential damages.

SOME STATES DO NOT ALLOW THE EXCLUSION OR LIMITATION OF INCIDENTAL OR CONSEQUENTIAL DAMAGES, SO THE ABOVE LIMITATION MAY NOT APPLY TO YOU.

THIS WARRANTY GIVES YOU SPECIFIC LEGAL RIGHTS, AND YOU MAY ALSO HAVE OTHER RIGHTS WHICH MAY VARY FROM STATE TO STATE.

FCC Note (United States Only)

Note: This equipment has been tested and found to comply with the limits for a Class B digital device, pursuant to Part 15 of the FCC Rules. These limits are designed to provide reasonable protection against harmful interference in a residential installation. This equipment generates, uses and can radiate radio frequency energy and, if not installed and used in accordance with the instructions, may cause harmful interference to radio communications. However, there is no guarantee that interference will not occur in a particular installation. If this equipment does cause harmful interference to radio or television reception, which can be determined by turning the equipment off and on, the user is encouraged to try to correct the interference by one or more of the following measures:

- Reorient or relocate the receiving antenna.
- Increase the separation between the equipment and receiver.
- Consult the dealer or an experienced radio/TV technician for help

NOTE: Changes or modifications not expressly approved by the manufacturer responsible for compliance could void the user's authority to operate this equipment.

Grow-with-Me™ RC Rally
Model Number: 77306

This device complies with Part 15 of the FCC Rules. Operation is subject to the following two conditions: (1) This device may not cause harmful interference and (2) this device must accept any interference received, including interference that may cause undesired operation.

Consumer Relations Department
636 Girard Avenue
East Aurora, New York 14052

Grow-with-Me™ RC Rally operates on 27 MHz radio frequency.

Radio interference can occur if more than one radio-controlled toy is operating on the same frequency. In the unlikely event that the remote interferes with the use of other remote controlled equipment, such as televisions and stereos, or if use of other electric or battery powered appliances interfere with operation of the RC Rally, do not use both devices at the same time.

Consumer Information

Questions? We'd like to hear from you!
Call Fisher-Price® Consumer Relations, toll-free at **1-800-432-KIDS**, 8 AM - 6 PM EST Monday through Friday. Hearing-impaired consumers using TTY/TDD equipment, please call 1-800-382-7470. Or, write to: Fisher-Price® Consumer Relations, 636 Girard Avenue, East Aurora, New York 14052.

For other countries, outside the United States:
Canada: call **1-800-567-7724**, or write to: Mattel Canada Inc, 6155 Freemont Blvd., Mississauga, Ontario L5R 3W2.
Great Britain: telephone 01628 500302.
Australia: Mattel Australia Pty. Ltd., 658 Church Street, Locked Bag #870, Richmond, Victoria 3121 Australia. Consumer Advisory Service 1300 135 312.
New Zealand: 16-18 William Pickering Drive, Albany 1331, Auckland.

Fisher-Price, Inc., a subsidiary of Mattel, Inc., East Aurora, NY 14052 U.S.A.
©2002 Mattel, Inc. All Rights Reserved. ® and ™ designate U.S. trademarks of Mattel, Inc.

Printed in China

77306pr-0920