N0414-0920G2 HW 1L I/S SIZE:16.5" x 8.5" COLOR: 1C+1C

TO PLAY

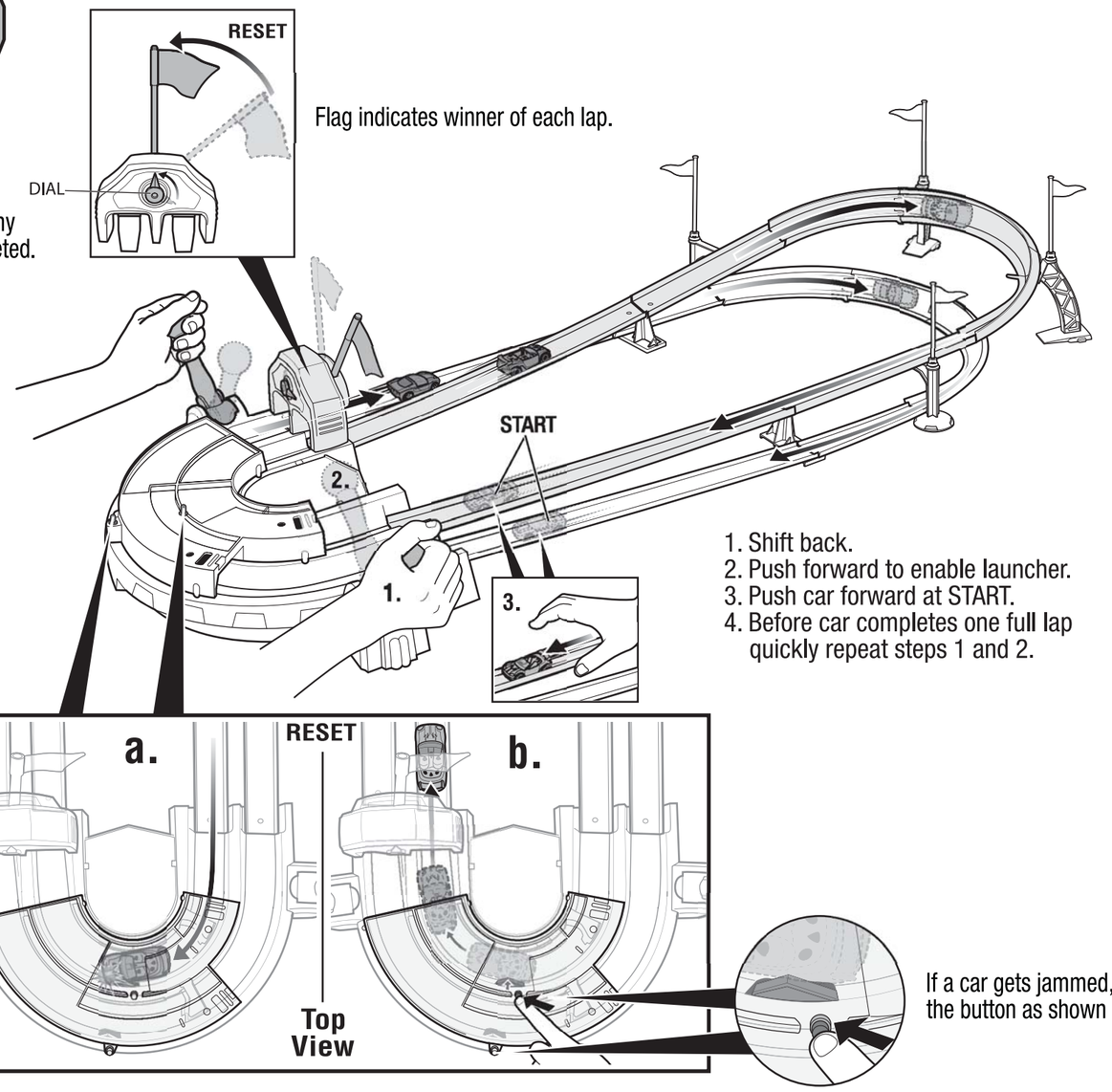

Flag indicates winner of each lap.

Dial indicates how many laps have been completed.

1. Shift back.
2. Push forward to enable launcher.
3. Push car forward at START.
4. Before car completes one full lap quickly repeat steps 1 and 2.

If a car gets jammed, push the button as shown to release.

SPEED SHIFT RACEWAY™

INSTRUCTIONS

Please keep these instructions for future reference as they contain important information.

CONTENTS

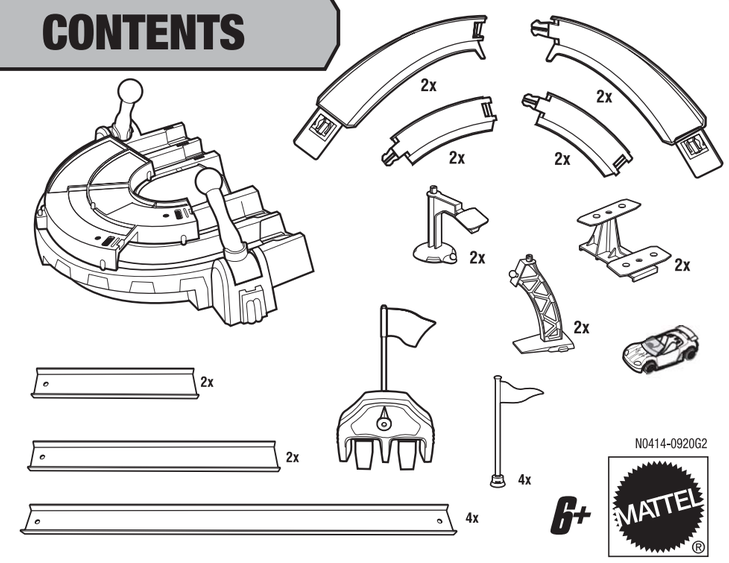

© 2008 Mattel, Inc. All Rights Reserved.

Mattel, Inc., 333 Continental Blvd., El Segundo, CA 90245 U.S.A. Consumer Relations 1 (800) 524-8697 service.mattel.com. • Mattel Canada Inc., Mississauga, Ontario L5R 3W2. You may call us free at 1-800-524-8697. • Mattel U.K. Ltd., Vanwall Business Park, Maidenhead SL6 4UB, Helpline 01628500303 • Mattel Australia Pty., Ltd., Richmond, Victoria. 3121.Consumer Advisory Service - 1300 135 312. • Mattel East Asia Ltd., Room 1106, South Tower, World Finance Centre, Harbour City, Tsimshatsui, HK, China. • Diimport & Diedarkan Oleh: Mattel SEA Ptd Ltd.(993532-P) Lot 13.5, 13th Floor, Menara Lien Hoe, Persiaran Tropicana Golf Country Resort, 47410 PJ. Tel:03-78803817, Fax:03-78803867.

ASSEMBLY

1.

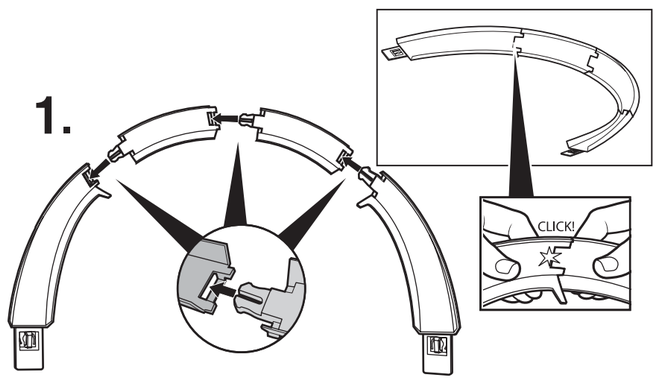

2.

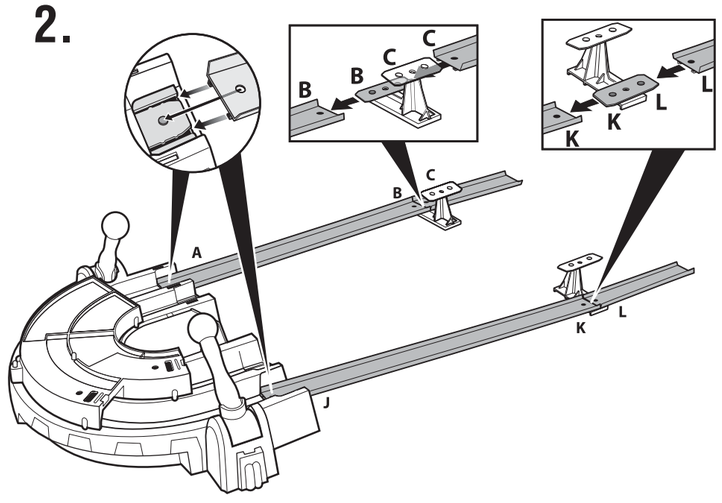

3.

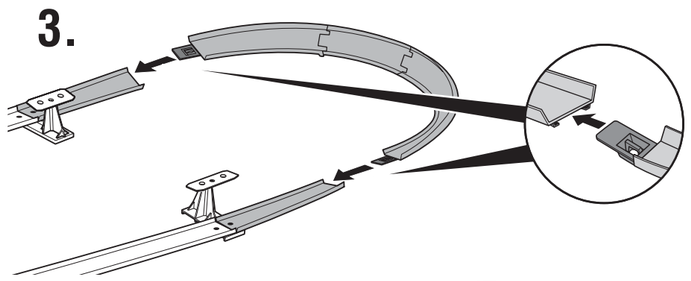

4.

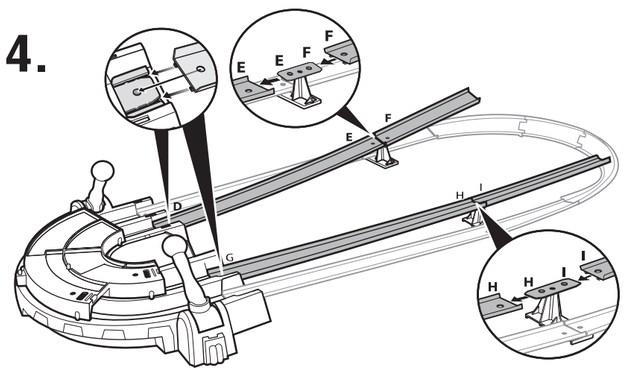

5.

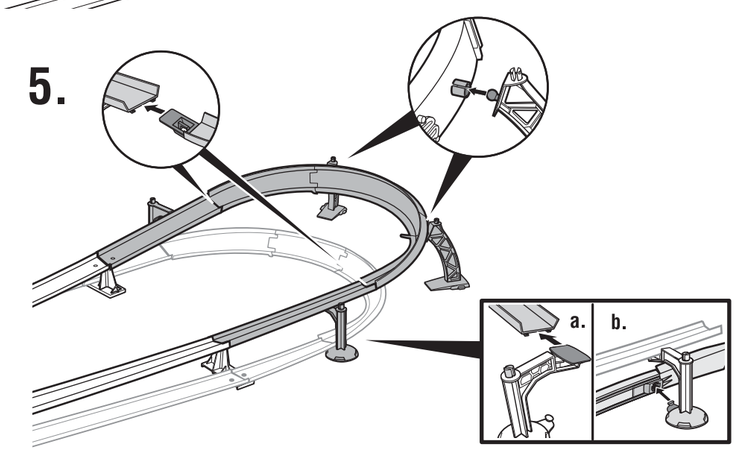

6.

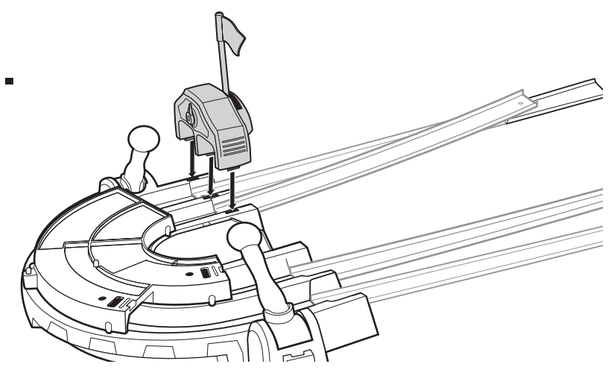

7.

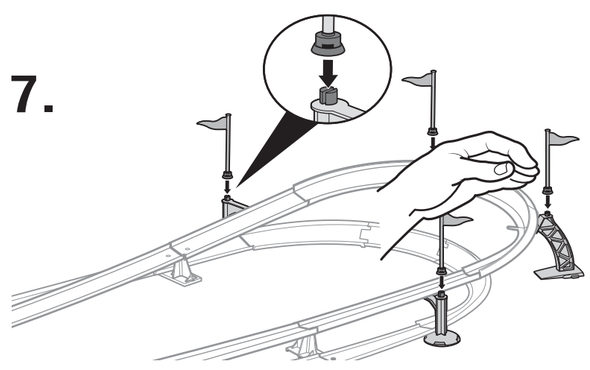
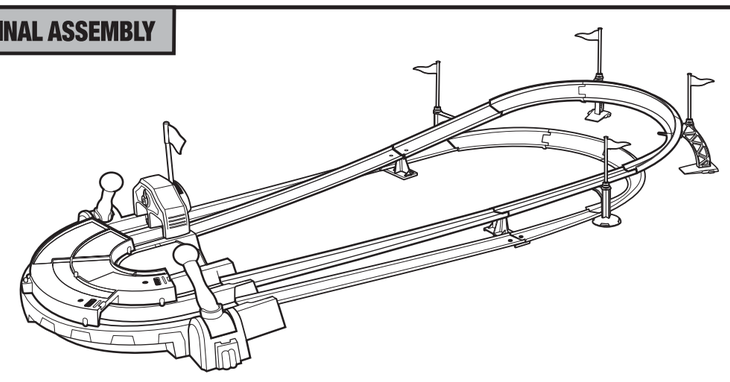
FINAL ASSEMBLY