W5883-0920 MB 1L IS SIZE: 16.5” x 8.5” COLOR: 1C+1C

FRONT

MATCHBOX® CLIFF HANGER™ SHARK ESCAPE!® INSTRUCTIONS

CONTENTS / 3+

W5883-0920

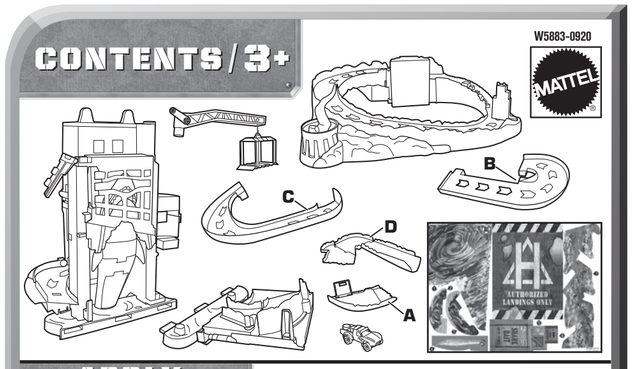

APPLY LABELS

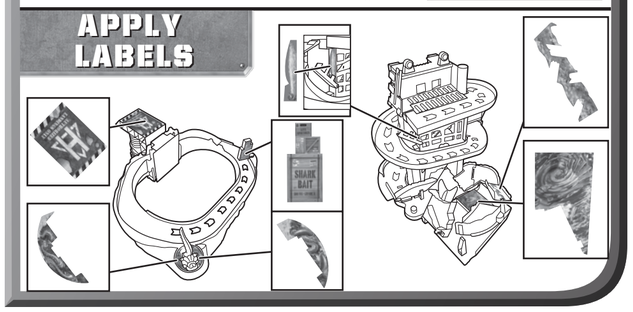

©2012 Mattel. All Rights Reserved. Mattel, Inc., 636 Girard Avenue, East Aurora, NY 14052, U.S.A. Consumer Relations 1-800-524-8697. Mattel U.K. Ltd., Vanwall Business Park, Maidenhead SL6 4UB. Helpline 01628 500303. Mattel Australia Pty., Ltd., Richmond, Victoria. 3121.Consumer Advisory Service - 1300 135 312. Mattel East Asia Ltd., Room 1106, South Tower, World Finance Centre, Harbour City, Tsimshatsui, HK, China. Diimport & Diedarkan Oleh: Mattel SEA Ptd Ltd.(993532-P) Lot 13.5, 13th Floor, Menara Lien Hoe, Persiaran Tropicana Golf Country Resort, 47410 PJ. Tel:03-78803817, Fax:03-78803867. SERVICE.MATTEL.COM

ASSEMBLY

1. Lie shark flat on play surface and pull out the base.

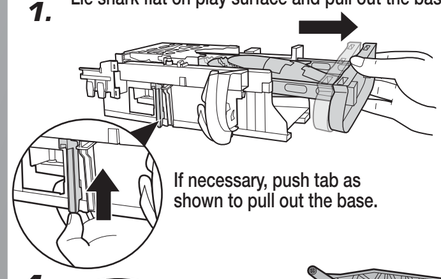

2. Close the base.

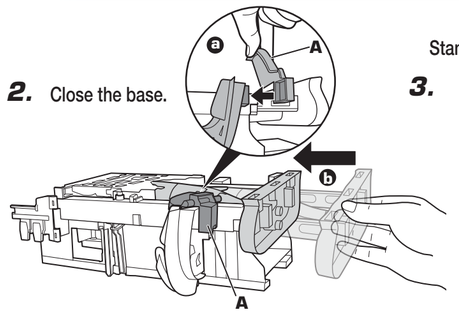

Stand play set upright and continue assembly.

3.

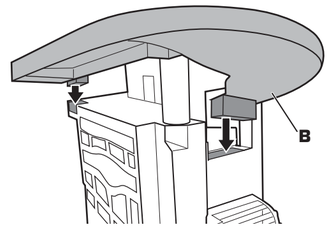

4.

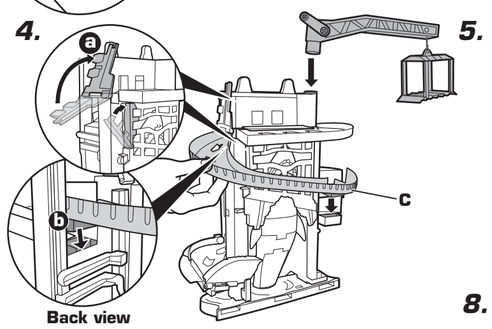

5.

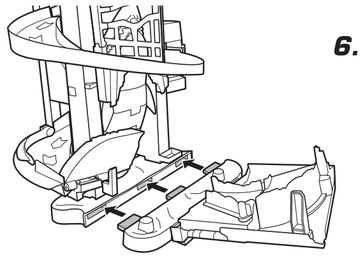

6.

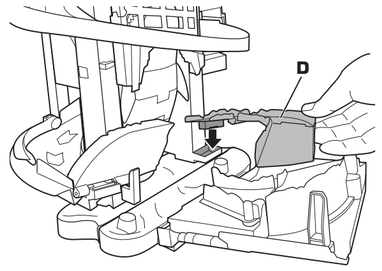

7.

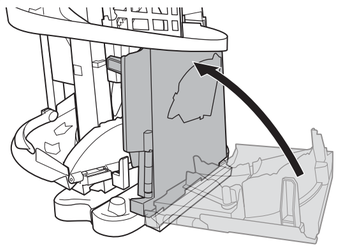

8.

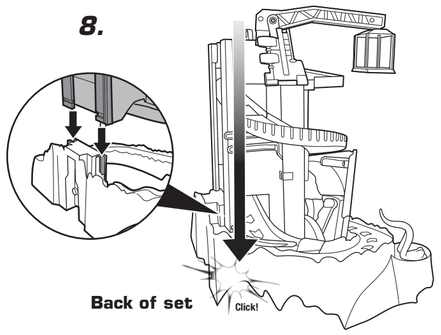

9.

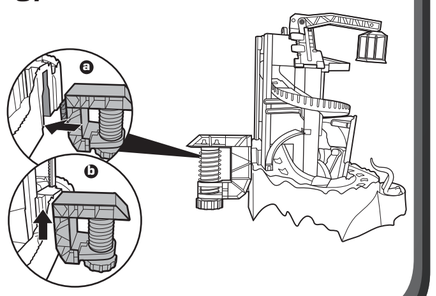

BACK

TO PLAY

1.

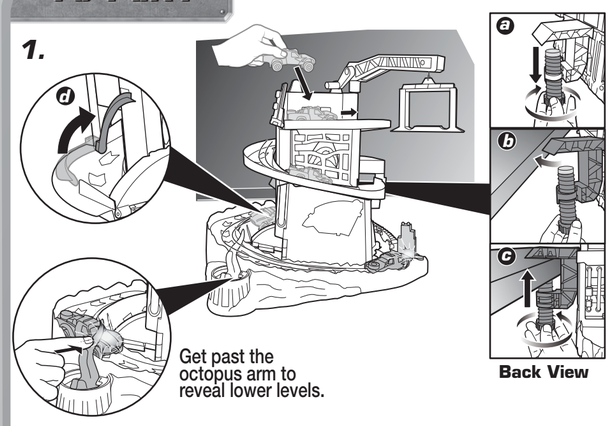

2.

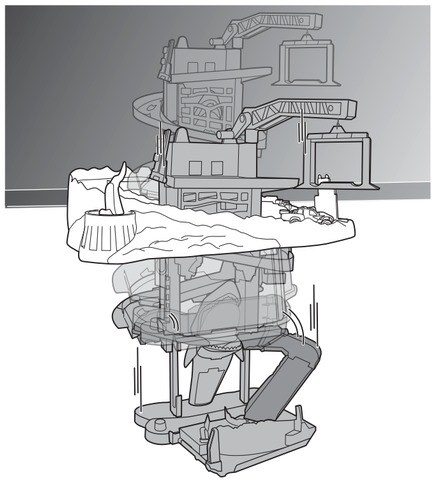

3. Avoid being bitten if you can.

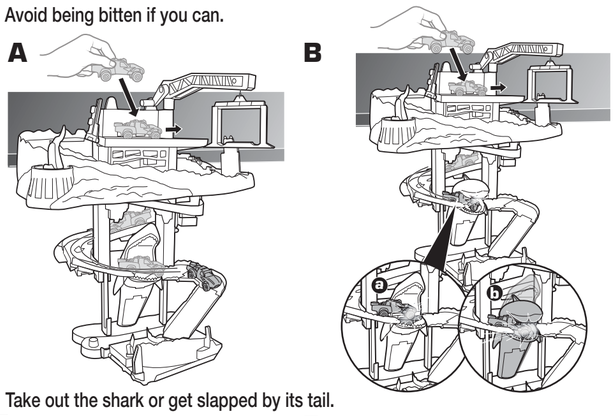

4. Take out the shark or get slapped by its tail.

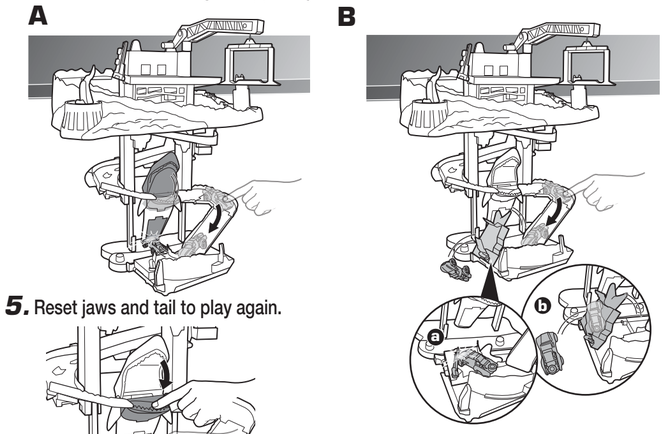

5. Reset jaws and tail to play again.

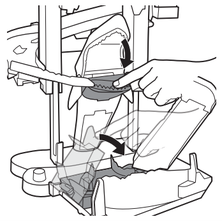

MORE WAYS TO PLAY

Reconnect rope if necessary

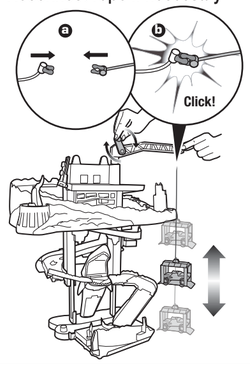

YOU CAN ALSO ATTACH PLAY SET TO DOOR FOR PLAY

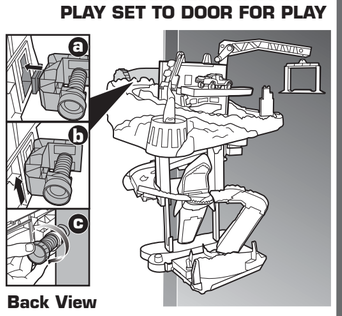

RESET PLAY SET

1.

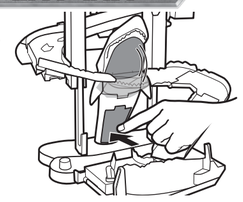

2.

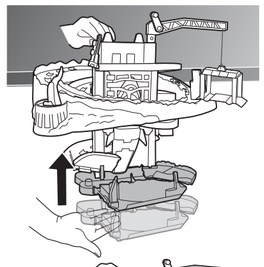

3.

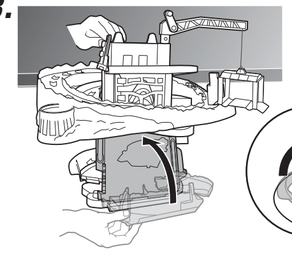

4.

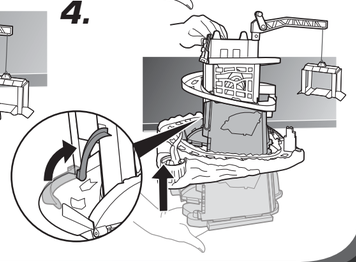

INSTRUCTION SHEET SPECIFICATIONS

Toy:	MEGA POWER SHIFT FIRE
Toy No.:	W5883
Part No.:	0920
Trim Size:	5.5W x8.5" H
Folded Size:	16.5 W x8.5" H
Type of Fold:	Single
# colors:	One
Colors:	Black
Paper Stock:	White Offset
Paper Weight:	70 lb.
EDM No.:	
Date:	04/03/12
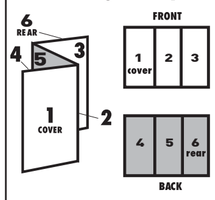
3 PANEL Folding Dummy